United States Patent [19]

Marioni

[11] **4,091,132**

[45] **May 23, 1978**

[54] **MULTICOLORED GLASS OBJECTS AND PROCESS FOR PRODUCTION**

[76] Inventor: **Peter Paul Marioni,** 1712 Elm, Richmond, Calif. 94805

[21] Appl. No.: **647,668**

[22] Filed: **Jan. 9, 1976**

[51] **Int. Cl.**[2] **B32B 17/06;** C03B 23/20

[52] **U.S. Cl.** **428/35;** 65/42; 65/46; 428/428

[58] **Field of Search** 65/36, 42, 67, 45, 46, 65/47, 48; 428/35, 428

[56] **References Cited**

U.S. PATENT DOCUMENTS

1,583,441	5/1926	Blenko	65/67
2,183,961	12/1939	Fischer	65/46

FOREIGN PATENT DOCUMENTS

2,094 of	1899	United Kingdom	65/67

Primary Examiner—Arthur D. Kellogg
Attorney, Agent, or Firm—Warren, Chickering & Grunewald

[57] **ABSTRACT**

There is disclosed a process for producing continuous, multicolored glass objects, such as stained glass windows without leading, which includes blowing a glass object, maintaining at least one colored pattern piece in contact with the surface of the object until the pattern piece becomes soft enough to be blown and then blowing the object to a final form whereby the pattern piece becomes incorporated in the glass object. Sheet material may be produced by blowing a cylinder, splitting the cylinder and flattening the cylindrical wall.

11 Claims, 1 Drawing Figure

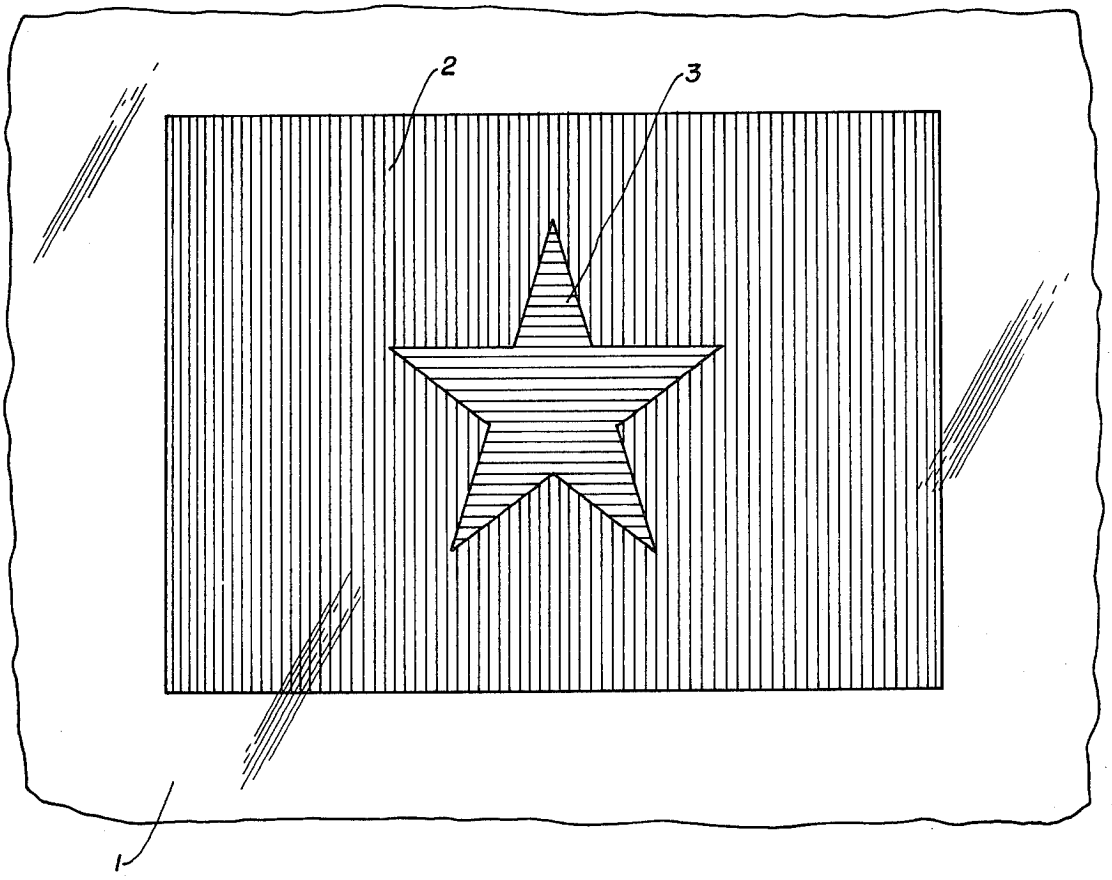

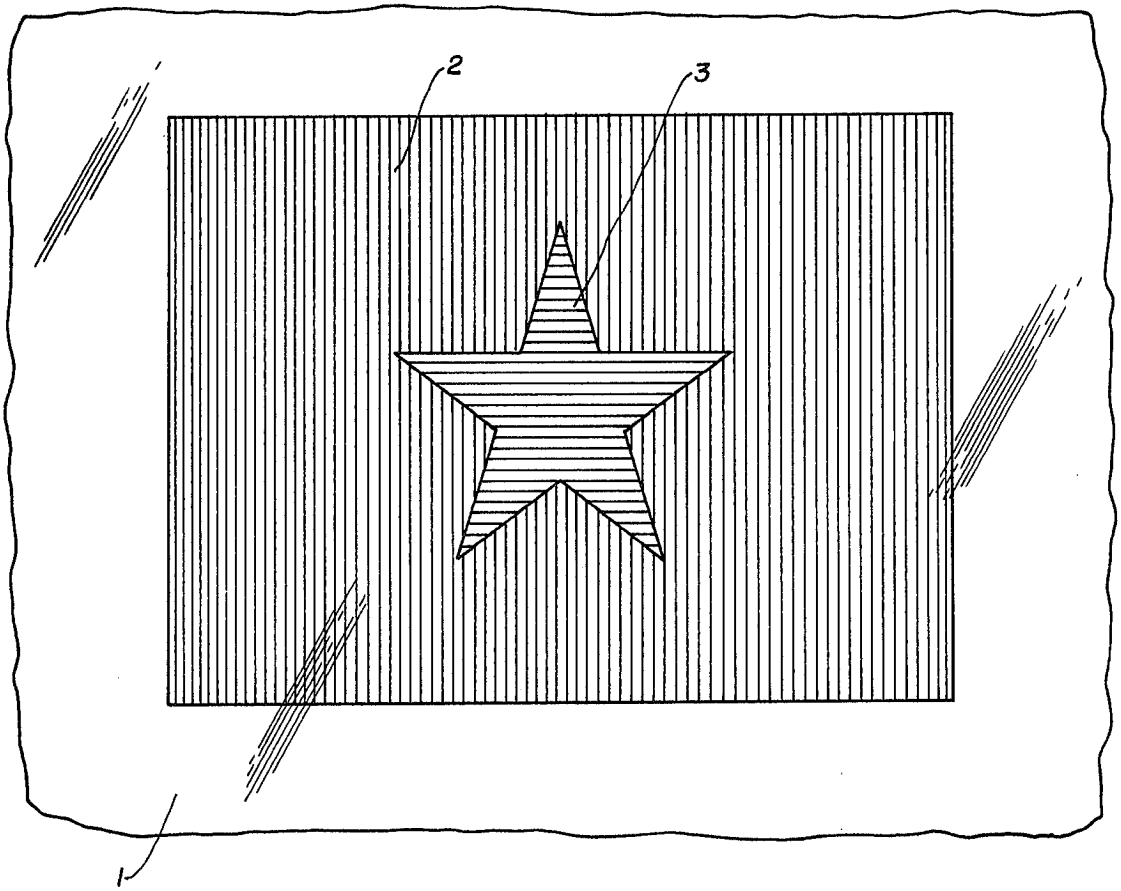
2
3
1

MULTICOLORED GLASS OBJECTS AND PROCESS FOR PRODUCTION

BACKGROUND OF THE INVENTION

Production of colored glass objects is an ancient art. Objects such as vases characteristically are all of a single color. Multicolored vases are made, but usually the different colors are in compact masses, such as a colored vase having a transparent handle. Multicolored vases also may be made by swirling one color of glass within another or by adding colored pieces such as medallions to protrude above the surface of the object itself.

Multicolored glass objects such as stained glass windows also have been made, and these are characteristically produced by holding variously colored pieces of glass in the desired relationship to one another by embedding their edges in channels of lead or other malleable metal.

Although it is desirable, there is no medium by which multicolored glass objects having distinct patterns can be made with smooth surfaces and as a continuous glass object having the pattern integral with the rest of the object. This is particularly true of objects in the form of flat panes of glass of ordinary sizes such as those that can be installed as windows.

In this specification and the appended claims, the term color is used in its usual sense as well as in a sense associated with glass. It is defined as either transparent or opaque glass elements of varying colors and includes opaque white glass, which is readily distinguishable from transparent glass.

The term pattern as used herein is defined as a deliberately made, distinct form or shape and includes representations of objects, animals, trees, persons, scenes and the like, as well as geometric shapes. Normally, an arbitrary form caused by swirling or running different colored glasses together is not a pattern in the sense of this invention.

THE INVENTION

This invention is a method for producing a continuous glass object which includes an integral colored pattern. The invention also includes the article produced by the process.

The process of this invention is one for forming a continuous, smooth-surfaced stained glass object, and it includes a first step of forming a gather of glass on the end of a blowpipe at a temperature at which it can be blown. The gather of glass is blown to form an initial hollow object which is maintained at a temperature at which it can be blown while a colored pattern piece is placed in contact with its surface. The colored pattern piece is maintained in contact with the surface until it softens to a blowable condition, after which the initial hollow object is again blown to form a second hollow object, which may or may not be the final article produced by the process. The process of this invention as hereinafter more fully described produces a continuous, one-piece glass object having a distinct, sharply outlined colored pattern incorporated within it.

The first step of the process is well known in the art. Glass is a supercooled liquid which does not exhibit a distinct melting point, but becomes more and more plastic as its temperature increases. The art of glass blowing is very old, and it is well known in that art to heat glass until it is in the proper condition to be accumulated on the end of a blowpipe with the proper viscosity to be blown. An accumulation of glass on the end of a blowpipe is known as a gather.

Skilled craftsmen are capable of blowing a gather of glass to form a hollow object of substantially any shape, such as a cylinder, a sphere, or various other curved surfaces to form such objects as vases, stemware, laboratory equipment or the like. Molds may be used along with glass blowing techniques to form objects to accurate dimensions or to form them more quickly. For example, a gather of glass may be positioned within a cylindrical mold and blown so that the glass contacts the interior surface of the mold to form a cylindrical glass object of the proper diameter. In the process of the present invention, the glass is blown more than once, and it is within the scope of this invention to employ different cylindrical molds of different diameters so that both initial and final objects of cylindrical shape can be produced.

A colored pattern piece, as that term is used in this description, is a separate piece of glass that is readily distinguishable from the hollow object by color or opaqueness. Separate pattern pieces are readily made by known glass cutting, sandblasting or casting techniques. These pattern pieces can be formed as geometric shapes or as representations of clouds, trees, animals, persons, fences, houses or the like. In constructing representations on an object of this invention, the representations may be made by use of multiple pattern pieces, which may be placed to abut one another, to overlap or to superimpose one another.

Pattern pieces useful in the process of this invention may be thin or thick, lightly or densely colored, opaque or transparent and may be used alone or in combination. The pattern pieces applied to the initial blown object adhere to it because the initial blown object is tacky, soft glass. When in contact with hot glass, the pattern pieces themselves become soft, and when the glass is further blown to form a second blown object, the pattern pieces become integral with the glass of the first blown object. The result is a seamless, one-piece object.

In a preferred embodiment of the invention, the pattern pieces are heated before applying them to the blown glass object. Preheating the pattern pieces avoids thermal shock and insures that the pattern piece will be at a temperature suitable for blowing. It is preferred that all pattern pieces be preheated, before being applied, to the point where they are beginning to soften, and it is particularly desirable to preheat thicker pattern pieces so that too much heat will not be extracted from the blown object to raise the temperature of the pattern piece to a softening temperature.

When the object is further blown after the pattern piece is in place, the pattern piece may expand. If it expands in all directions equally, the general shape of the pattern piece will not change. If the pattern piece is blown to expand in one direction only, for example, when the hollow object is a cylinder and subsequent blowing increases its diameter but not its length, the length to width proportions of the pattern piece will change during subsequent blowing. Accommodation to such changes in shape may be made by selecting the appropriate shaped pattern piece in the first instance. For example, if the ultimate pattern in the final blown glass object is to be a square, it will be necessary to apply a rectangular pattern piece to the initial blown glass object so that expansion in its width but not its length will result in the production of a square.

In another embodiment of the invention, the blown glass object, with its pattern piece in place, may be covered with another gather before it is blown to its final shape. In this embodiment of the invention, a final object is produced which is a one-piece glass object having a layer of glass on both sides of the pattern piece.

The process of the present invention may be employed to produce unique panes of glass in the form of stained glass windows without leading. Such panes are made by blowing an initial hollow object in the form of a cylinder, adding one or more pattern pieces in an appropriate pattern to form a representation on the surface of the cylinder, forming at least a second hollow object by further blowing, with the second hollow object also in the form of a cylinder, and then opening the ends of the cylinder, splitting it on a line parallel to its longitudinal axis, heating the cylinder to a softening temperature and then rolling it flat to form a glass pane. The technique for splitting and rolling cylindrical glass pieces is known to the art. By the process described hereinabove, a pane of glass can be formed with a single colored object, such as a tree, in the center of a transparent piece of glass. Obviously, other patterns may be employed which cover all or substantially all of the pane of glass as well as patterns that may be formed of a background of colored glass with a transparent object in the center.

As stated hereinabove, the invention is also manifested in the form of a continuous glass article having a smooth surface and an integral colored pattern. In other words, a one-piece glass article which includes a pattern of a different color or texture.

DETAILED DESCRIPTION OF THE INVENTION

One process embodying this invention includes preparing a molten mass of transparent glass and maintaining it at a temperature at which it is liquid and of suitable viscosity to be blown. A gather of glass is placed on the end of a blowpipe, and it is blown to a cylindrical shape, with or without the use of a mold, to form an initial hollow object.

While the glass is still hot enough to be blown, a thin pattern piece in the form of a square and made of pale red glass is preheated to its softening temperature and placed on the cylindrical surface of the first hollow object. The pattern piece adheres firmly to the surface. The initial hollow object with the pattern piece in place may then be reheated, if necessary, or if not necessary it may be blown further to form a second hollow object which is in the form of a cylinder of larger diameter than the first hollow object. This cylinder is a one-piece cylindrical article having an integral red rectangle on its surface.

Another pattern piece in the shape of a blue star is then preheated to softness and placed on the surface of the second hollow object in the center of the red rectangle. The second hollow object is then dipped to take on another gather of glass and is again blown to a slightly larger cylinder to form a final cylindrical hollow object.

The final object is in the form of a transparent glass cylinder having a red rectangle on its cylindrical surface and having a blue star in the center of the red rectangle. This final object is cut first to remove the closed ends, and then the cylinder is split on a line parallel to its longitudinal axis and diametrically opposite the center of the blue star. The cylinder is then heated to its softening point, opened along the cut wall and then rolled flat. The flat piece is then cooled to harden it and annealed if necessary. The final product is a flat plate of transparent glass having a blue star on a red rectangle positioned in its center.

The accompanying drawing illustrates a partial view of the article made as described above. The portion designated **1** is a flat pane of transparent glass. The portion designated **2** is the rectangular red background, and the portion designated **3** is the blue star.

What is claimed is:

1. A process for forming a continuous, smooth-surfaced, multicolored glass object comprising:

A. forming a gather of glass at a temperature at which it can be blown,

B. blowing an initial hollow object from the gather,

C. placing a colored pattern piece in contact with the surface of the initial object while said initial object is at a temperature at which it can be blown,

D. maintaining the pattern piece in contact with the surface of the initial object for a time sufficient for the pattern piece to reach a temperature at which it can be blown, and

E. blowing the initial hollow object only to the extent to produce a second hollow object having said pattern piece integral therewith and said second hollow object having a size and shape such that said pattern piece has a predetermined shape which is not substantially distorted from the original shape of said pattern piece.

2. The process of claim **1** wherein the final hollow object is a cylindrical object.

3. The process of claim **2** wherein the cylindrical object is split and unrolled to form a sheet.

4. The process of claim **1** wherein said pattern piece is heated before it is placed in contact with the initial hollow object.

5. The process of claim **1** wherein said initial hollow object is coated with another gather before said second hollow object is produced.

6. The process of claim **1** wherein said second hollow object is coated with a gather of glass and blown to produce a third hollow object.

7. The process of claim **1** wherein a plurality of pattern pieces are employed to form a pattern.

8. An article comprising a continuous, smooth-surfaced, glass membrane including an integral colored pattern and made by the process of claim **1**.

9. The article of claim **8** including a transparent glass membrane surrounding said pattern.

10. The article of claim **8** in the form of a flat sheet.

11. The process of claim **1** wherein said pattern piece is produced by sandblasting.

* * * * *

United States Patent [19]

Hacker

[11] **Patent Number: 4,685,949**

[45] **Date of Patent: Aug. 11, 1987**

[54] **GLASS FLOWER PROCESS**

[76] Inventor: **Donald E. Hacker,** 3200 NW. 5th Ter., Pompano Beach, Fla. 33064

[21] Appl. No.: **943,327**

[22] Filed: **Dec. 19, 1986**

[51] **Int. Cl.**[4] **C03B 23/09**

[52] **U.S. Cl.** **65/42;** 65/46; 65/64; 65/70; 65/87; 65/105

[58] **Field of Search** 65/42, 44, 46, 63, 64, 65/70, 87, 89, 102, 105, 112, 17

[56] **References Cited**

U.S. PATENT DOCUMENTS

703,618	7/1902	Sievert	65/63
805,943	11/1905	Campbell	65/87 X
861,055	7/1907	Seymour	65/46
1,230,368	6/1917	Barber	65/46
1,372,294	3/1921	Karabin et al.	65/105 X
2,551,279	5/1951	Miller	65/64
3,463,624	8/1969	Labino	65/102 X
3,539,919	11/1970	Hogg	65/42 X

Primary Examiner—Robert L. Lindsay
Attorney, Agent, or Firm—Joseph Zallen

[57] **ABSTRACT**

In a process for preparing glass flowers having petals, the steps of preparing petals which comprise providing a blown elongated enlarged hollow bulb on a hollow glass tube, heating and manipulating the bulb so as to separate it into two vertical dish-like pre-petal members, removing the pre-petal members from the tube, elongating the ends of the pre-petal members so as to form solid tips, attaching the members to a glass flower stem at the tips and heating and manipulating the members so as to refine the shape of the petals.

1 Claim, 8 Drawing Figures

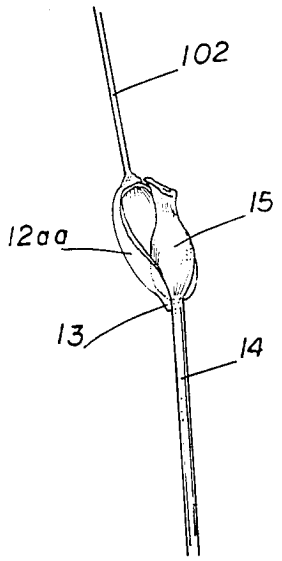

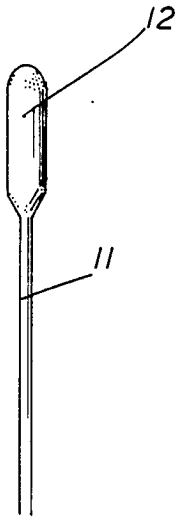

FIG. 1

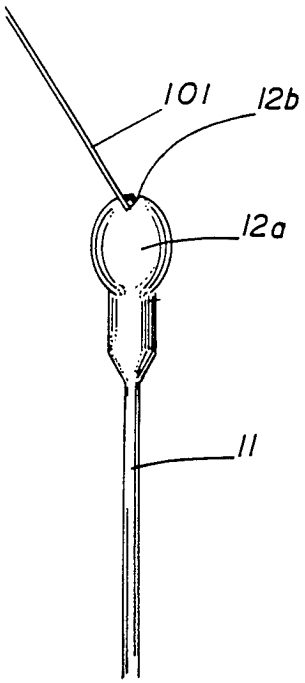

FIG. 2

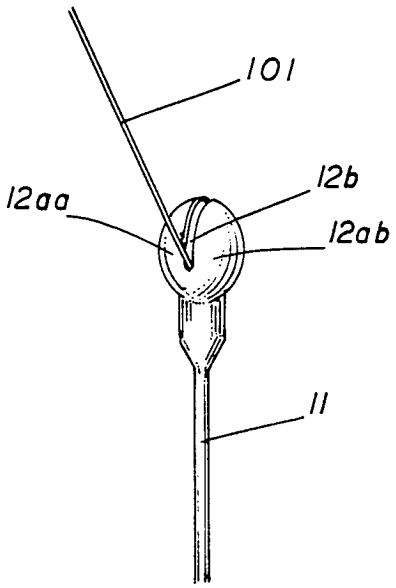

FIG. 3

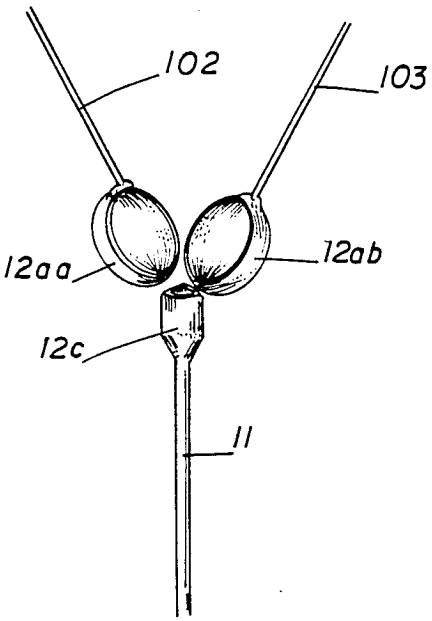

FIG. 4

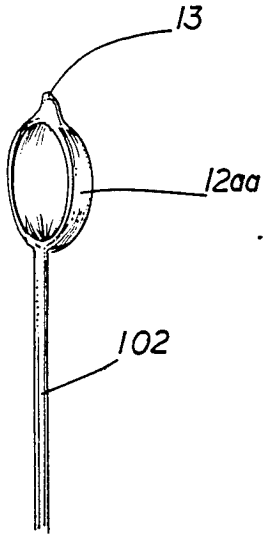

FIG. 5

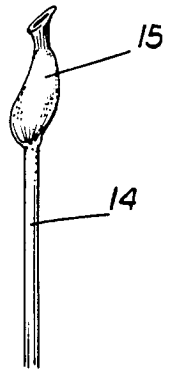

FIG. 6

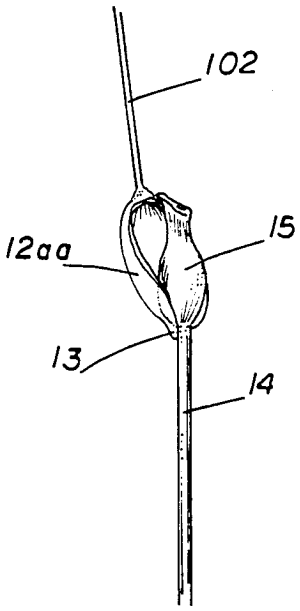

FIG. 7

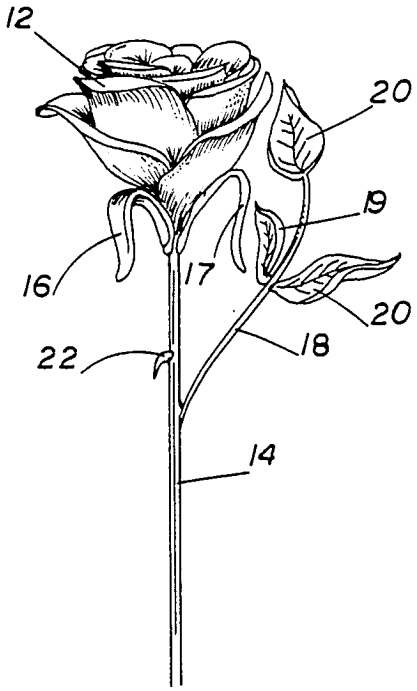

FIG. 8

GLASS FLOWER PROCESS

BACKGROUND OF INVENTION

This invention relates to a method for making glass flowers. In particular it relates to a method for making glass flowers which resemble real flowers more closely than prior art methods.

Although making of artistic glass objects is an old art and glass blowing a well-established skill, no commercially feasible method has been hitherto described for making glass flowers which truly resemble real flowers.

One object of the present invention is to provide a method for making glass flowers which closely resemble true flowers.

Other objects and advantages of this invention will be apparent from the description and claims which follow, taken together with the appended drawings.

SUMMARY OF INVENTION

The invention comprises broadly making petals by forming a closed-in hollow ellipsoid at the end of a glass tube, cutting the ellipsoid transversely so as to form two dish-like members, attaching solid stems to such members, and drawing out the opposite ends to form tips so that the dish-like members now resemble petals, attaching the tips to a preformed stem structure and heating the dish-like members so as to form them into the desired final petal shapes.

BRIEF DESCRIPTION OF DRAWINGS

FIG. **1** shows a glass tube with a closed bulbous end.

FIG. **2** illustrates the end of the bulb being further enlarged and showing it being opened up after heating with a hot thin metal wire.

FIG. **3** shows further opening.

FIG. **4** shows the final result after cutting and separation.

FIG. **5** shows a formation of a tip on the end of the petal former.

FIG. **6** shows the formation of the flower stem to which the petals and leaves are to be attached.

FIG. **7** shows the attachment of a petal former to the stem.

FIG. **8** shows a complete flower where a multiplicity of petals have been attached to the stem together with leaves.

SPECIFIC EXAMPLE OF INVENTION

Having reference to the drawings a hollow glass tube **11** is blown to form an obloid closed end **12**. Blowing is continued to form an enlarged ellipsoid end **12***a*. A heated metal rod **101** is used to pull glass out in line and then pick excess off after being heated. This yields separation **12***b* in ellipsoid end **12***a* to provide two dish-like members **12***aa* and **12***ab*.

Solid glass rods **102** and **103** are then attached to the top portions of the dish-like members **12***aa* and **12***ab* so that they may be removed, leaving socket **12***c* attached to original hollow tube **11**.

A tip **13** is formed at the top of members **12***aa* and **12***bb* and are inverted so as to be attached so that the tips **13** are attached to the stem **14** which had been previously prepared. Hollow flower stem **14** has an enlarged end **15** formed by heating. After the petals forming sections **12***aa* and **12***ab* and correspondingly similar sections are formed and attached to stem **14** they are then heat-softened and manipulated to form a shape more closely resembling the actual flower petal. Various other additional portions **16,17,18,19,20** and **22** are separately formed and attached to stem **14**.

I claim:

1. In a process for preparing glass flowers having petals, the steps of preparing a petal comprising: providing a blown elongated enlarged hollow bulb on a hollow glass tube, heating and manipulating the bulb so as to separate it into two elongated dish-like pre-petal members, removing a said pre-petal member from the tube, elongating the end of said pre-petal member so as to form a solid tip, attaching said member to a glass flower stem at said tip and heating and manipulating said member so as to refine the shape of the petal.

* * * * *

US005108478A

United States Patent [19]

Schildt et al.

[11] Patent Number: 5,108,478

[45] Date of Patent: Apr. 28, 1992

[54] METHODS OF AND APPARATUS FOR THE FURTHER PROCESSING OF GOBS OF GLASS

[75] Inventors: **Hinnerk Schildt; Klaus Pollath,** both of Mainz; **Ekkehard Wedekind,** Frankfurt am Main, all of Fed. Rep. of Germany

[73] Assignee: **Schott Glaswerke,** Mainz, Fed. Rep. of Germany

[21] Appl. No.: **759,777**

[22] Filed: **Sep. 13, 1991**

Related U.S. Application Data

[63] Continuation of Ser. No. 420,677, Oct. 10, 1989, abandoned, which is a continuation-in-part of Ser. No. 827, Jan. 6, 1987, abandoned, which is a continuation-in-part of Ser. No. 694,296, Jan. 24, 1985, abandoned.

[30] **Foreign Application Priority Data**

Jan. 31, 1984 [DE] Fed. Rep. of Germany 3403229

[51] **Int. Cl.**[5] **C03B 11/06;** C03B 9/03; C03B 9/00

[52] **U.S. Cl.** **65/47;** 65/46; 65/54; 65/64; 65/72; 65/76; 65/77; 65/79; 65/82

[58] **Field of Search** 65/46, 47, 48, 49, 54, 65/64, 66, 68, 72, 73, 74, 76, 77, 79, 82, 142, 228, 229

[56] **References Cited**

U.S. PATENT DOCUMENTS

693,130	2/1902	Haley et al.	65/229
1,777,206	9/1930	Burthe et al.	65/79
2,338,269	1/1944	Schwarz	65/79
4,411,681	10/1983	Northup	65/68
4,619,682	10/1986	Gunthner	65/76

FOREIGN PATENT DOCUMENTS

293169	10/1915	Fed. Rep. of Germany .	
2161885	7/1973	Fed. Rep. of Germany .	
2250715	7/1975	France	65/68
1441771	7/1976	United Kingdom	65/68

Primary Examiner—Kenneth M. Schor
Attorney, Agent, or Firm—Nies, Kurz, Bergert & Tamburro

[57] **ABSTRACT**

A gob of glass sucked from a glass metal and held in a suction mold (7) is further processed by preshaping the glass in the mold by a punch (4) having a projection (9) for forming in a recess or cavity (14) in the gob in the opening in the mold, and a plate-like surface (10) for forming a plate shaped bead (5) around the opening. This results in a large contact surface against which a blowpipe (1') with a transverse attachment plate (6) having a working surface flush with the end of the bore (3) of the blowpipe is pressed to attach the plate (6) to the bead (5). With this arrangement, the bore cannot become blocked with glass during the pressing operation.

2 Claims, 2 Drawing Sheets

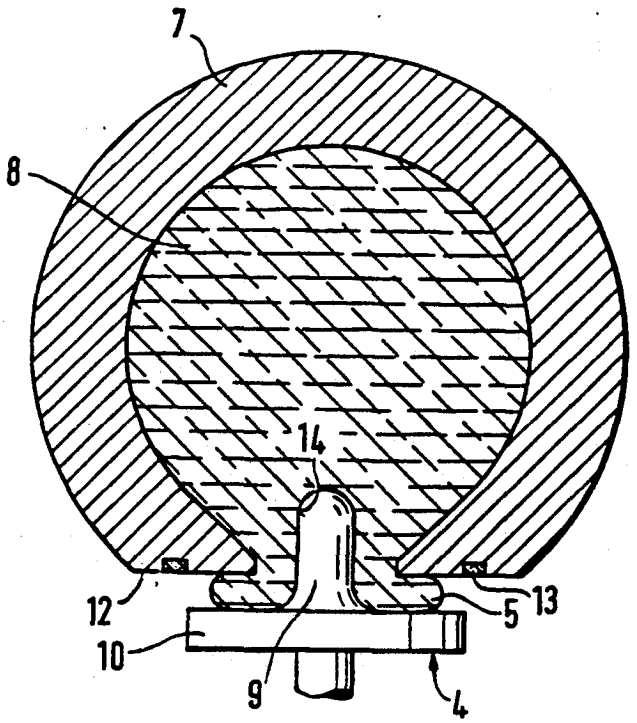

Fig. 1 PRIOR ART

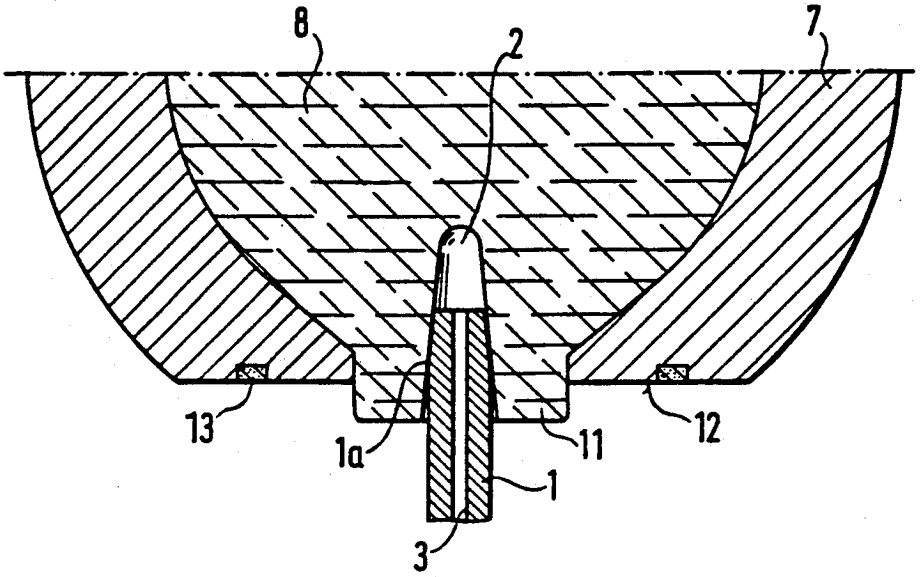

Fig. 2

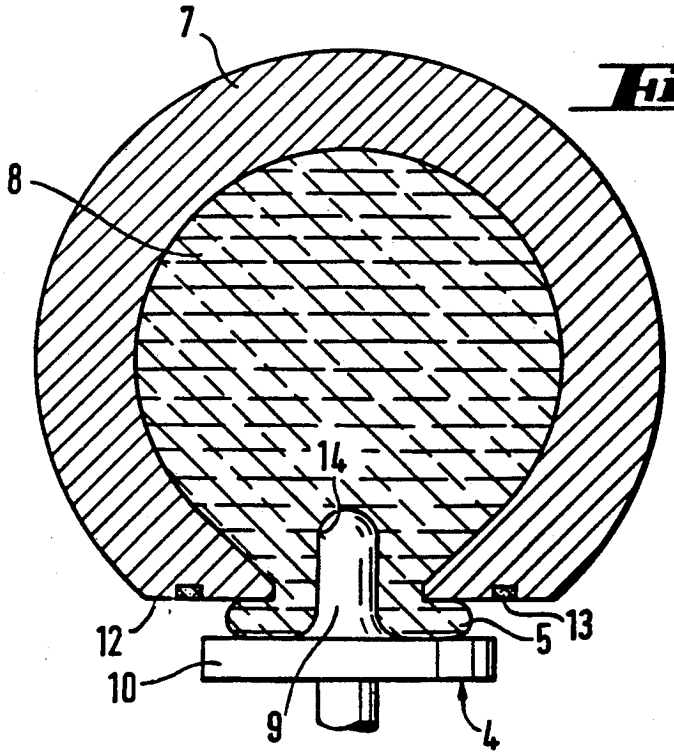

Fig. 3

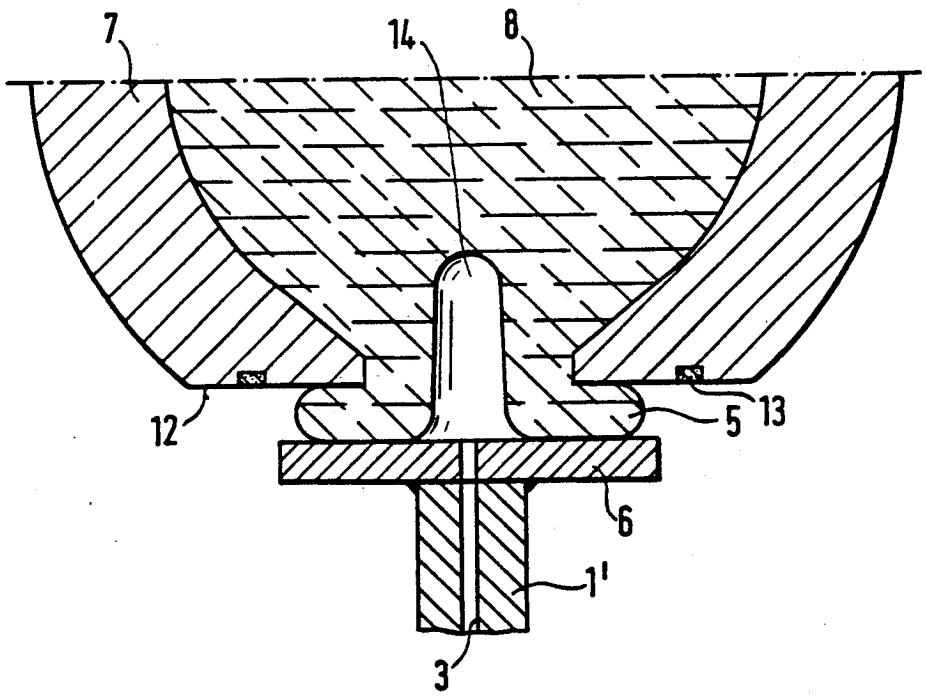

METHODS OF AND APPARATUS FOR THE FURTHER PROCESSING OF GOBS OF GLASS

CROSS REFERENCE TO RELATED APPLICATIONS

This application is a continuation of application Ser. No. 07/420,677, filed Oct. 10, 1989, now abandoned, which is a continuation of application Ser. No. 07/000,827, filed Jan. 6, 1987, now abandoned, which is a continuation of application Ser. No. 06/694,296, filed Jan. 24, 1985, now abandoned.

This invention relates to methods of and apparatus for the further processing of gobs of glass.

In particular, the present invention is concerned with the further processing of a gob of glass which has been sucked from a glass melt and held in a suction mould for subsequent transfer to a blowpipe, and with the attachment of the glass gob to a blowpipe.

BACKGROUND OF THE INVENTION

It is known from German Patent Specification No 21 61 885 to use a tool such as a punch to form a recess in part of the glass which has been forced out of the mould, the diameter of the recess being equal to that of the blowpipe, by the action of the tool on the glass. The form of the tool is such that the glass driven out from the mould by the punch is pressed into an annular recess in the punch tool.

After being thus pressed, the glass gob is delivered to this blowpipe by inserting the blowpipe into the recess. This process, however, has the disadvantage in that when the blowpipe is inserted for attachment to the glass gob, the pressure that can be produced at the blowpipe/glass contact surface is small, since the glass can escape outwards away from the blowpipe/glass interface thereby preventing the build-up of pressure necessary for an effective attachment of the blowpipe to the glass gob.

Furthermore, with this known arrangement the blowpipes/glass interface contact surface is too small to enable heavy gobs to be held on the blowpipe. Thus the requisite adherence between the blowpipe and the glass is difficult to attain, so that the blowpipe has to be variably pressed into the glass, sometimes deeply and sometimes less deeply into the glass to achieve the requisite adherence.

In this known process the blowpipe bore often becomes clogged by the glass. Consequently, an orderly and economic operation becomes impossible or very difficult.

German Patent Specification No AS 293 169 discloses a method in which a semi-finished glass object having an open side is formed with one or more projecting adhesive edges at the open side, the edges being connected to an attachment or mounting plate provided at the end of a blowpipe, which plate is flush with the end of the blowpipe tube. However, the contact surface is so small that heavy glass gobs cannot be reliably held upon the blowpipe.

OBJECTS OF THE INVENTION

An object of the present invention is to facilitate the production of an adequate contact surface between the glass and the blow pipe whereby the mounting of relatively heavy glass gobs can be reliably achieved.

A further object of the invention is to provide tool for carrying out the method of the invention.

SUMMARY OF THE INVENTION

Broadly, according to a first aspect of the invention there is provided a method of facilitating the attachment of a blowpipe to a gob of glass sucked from a glass melt and held in a suction mould, comprising the steps of preshaping the gob of glass by driving glass out of the mould opening; forming around the mould opening a plate shaped bead having a recess or cavity therein; and pressing a blowpipe with a transverse gob attachment plate against the bead, whereby the blowpipe becomes attached to the bead by the application of pressure.

A second aspect of the invention provides a tool for forming the bead and the recess or cavity.

BRIEF DESCRIPTION OF THE FIGURES

For a better understanding of the invention and to show how the same may be carried into effect reference will now be made to the accompanying drawings in which:

FIG. **1** is a section through a known construction of a suction mould, only a part of which is shown, and a blowpipe attachment end;

FIG. **2** is a section of a suction mould and illustrating a stage in the method of the invention; and

FIG. **3** is a section of part of the mould of FIG. **2**, and illustrating the attachment of a blowpipe in accordance with a further stage of the method of the invention.

DESCRIPTION OF THE INVENTION

Referring not to FIG. **1** which illustrates a gob **8** of glass held in a suction mould **7**, the gob being pre-shaped by the method described in German Patent Specification No 21 61 885 so as to produce a bead **11**. In order to transfer the gob **8** from the mould a blowpipe **1** is inserted into a recess or cavity **2** formed in the glass **8** and the bead **11**. The suction mould **7** presents a plane surface **12** having an inlaid pressure ring or washer **13**. As will be seen the resulting interface or contact surface between the glass and the blowpipe **1** is usually restricted to the tapering part **1***a* of the blowpipe **1**.

In FIG. **2** the glass gob **8** is pre-shaped by means of a tool i.e., punch **4**, having a spike, pin or the like projection **9** upstanding from a transversely directed plate **10**, by pressing the tool against the portion of the glass adjacent the opening of the mould so that the projection **9** forms a cavity **14** in the glass whereby a corresponding volume of glass is forced out from the mould, the glass driven out from the mould forming the bead **5**. By pressing the tool **4** with sufficient pressure the bead will be pressed into a plate like form. It will thus be seen that the tool produces simultaneously the recess or cavity **14** and a plate like bead **5**.

A blowpipe **1'** having a transversely directed gob attachment plate **6** at the end thereof, the attachment surface of the plate **6** being flush with the end of the pipe, is firmly pressed, whilst the plate is pre-heated to a suitable working temperature, against the plate like bead **5**. Since the bead **5** is effectively supported by the adjacent region of the surface **12** of the mould and thus sandwiched between the mould surface **12** and the plate **6** it is possible to press the plate **6** against the bead **5** with sufficient pressure to ensure that the plate **6** becomes firmly attached to the bead and thus the glass gob.

It will be noted that since the plate **6** working surface is flush with the end of the bore **3** in the blowpipe, which bore aligns with the recess or cavity **14**, glass is not forced into the bore **3** so that clogging of the bore during the blowpipe attachment operation is avoided.

What is claimed is:

1. A method of facilitating the attachment of a blow pipe to a gob of glass removed from a glass melt and held in a suction mold, said mold having an opening surrounded by an essentially planar surface, comprising the steps of

providing said glass gob held in said suction mold,

providing a shaping tool having a central spike surrounded by a plate, where the spike protrudes from the plate transversely to the plate and the spike is connected to the plate,

preshaping the gob of glass by driving the shaping tool spike first through the opening in said mold and then into said mold to cause the spike to force a portion of the glass out of the mold openings and to form a recess in said gob, the shaping tool spike being driven into the mold sufficiently to thereby form said portion of glass forced out of the mold opening into a plate shaped glass bead against said planar surface of said mold, said bead having a flat outer surface surrounding said recess, said flat outer surface being formed by said shaping tool plate and being over the entire length of the flat outer surface to said essentially planar surface of said mold,

removing said shaping tool to expose said flat outer surface of said bead and thereafter

providing a blow pipe having a central bore and a gob attachment plate transverse to said central bore,

firmly pressing said blow pipe against said flat outer surface of said bead such that said gob attachment plate mates with the bead flat outer surface with said bore being aligned with said recess for fluid flow, said firmly pressing being effected while said gob attachment plate is heated to thereby ensure that said gob attachment plate becomes firmly attached to the flat outer surface of said bead and thereby attached to said glass gob.

2. The method of claim **1**, wherein a space is maintained between the exit of said bore leading into the recess and the glass around said recess to thereby prevent clogging of said bore.

* * * * *

US005378183A

United States Patent [19]

Preston

[11] **Patent Number: 5,378,183**

[45] **Date of Patent: Jan. 3, 1995**

[54] **METHOD OF MANUFACTURING ELECTRODES**

[76] Inventor: **Daniel Preston**, 1065 Jackson Ave., Long Island City, N.Y. 11101-5718

[21] Appl. No.: **46,411**

[22] Filed: **Apr. 12, 1993**

[51] **Int. Cl.**[6] **H01J 9/26**

[52] **U.S. Cl.** **445/26**; 445/67; 65/42; 65/138; 65/155

[58] **Field of Search** 445/26, 27, 67; 65/42, 65/57, 59.27, 59.33, 138, 155

[56] **References Cited**

U.S. PATENT DOCUMENTS

1,637,989	8/1927	Eisler	65/155 X
2,447,158	8/1948	Cartun	65/57
2,549,359	4/1951	Bakanan	445/67
2,565,126	8/1951	Flaws	445/67 X
2,672,711	3/1954	Nash	65/155
3,395,007	7/1968	Schor	65/42
3,685,881	8/1972	Rochet	445/27

Primary Examiner—Kenneth J. Ramsey
Attorney, Agent, or Firm—Kaplan and Mugno

[57] **ABSTRACT**

An improved design and method and of manufacturing a luminous tube electrode comprises the steps of placing an electrode shell in an outer tube and allowing conductors connected to the electrode shell to emanate from an open end of the outer tube. A tubulation with a flared end is then butted up against the end of the outer tube, thereby sandwiching the conductors between the flared end of the tubulation and the outer tube. The flared end of the tubulation are then fused to one another forming a hermetic seal between each other and the conductors, resulting in the finished electrode. A further provision is made to blow a bubble in the tubulation.

13 Claims, 3 Drawing Sheets

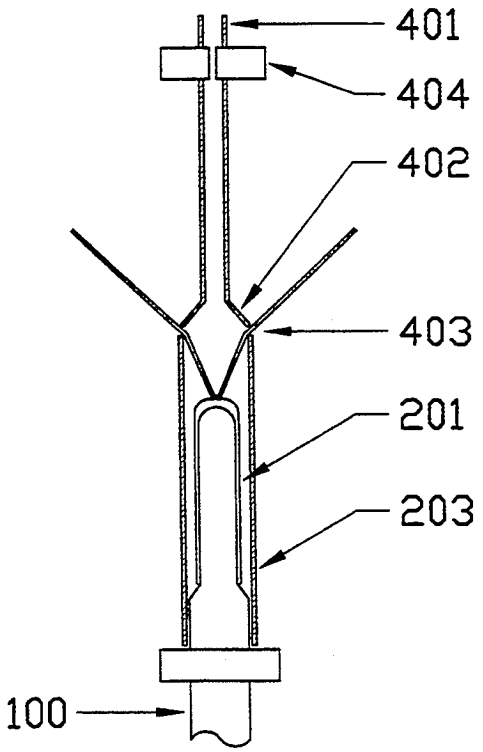

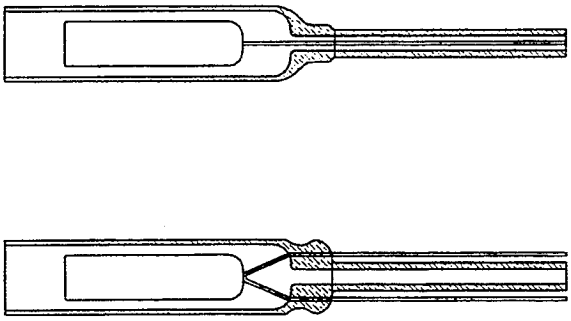

FIG 1B

FIG 1A

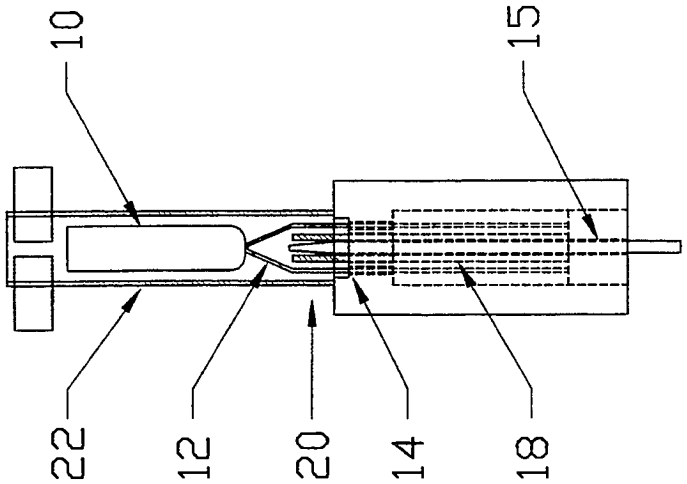

FIG 1

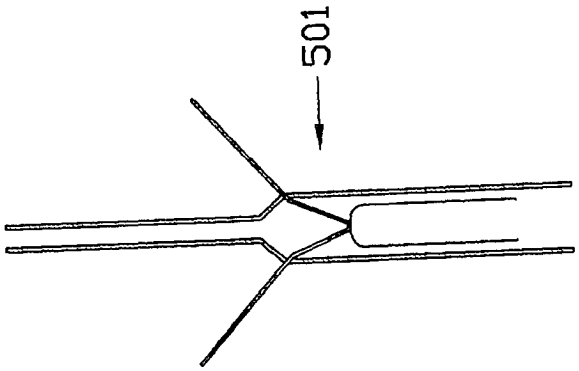

FIG 5

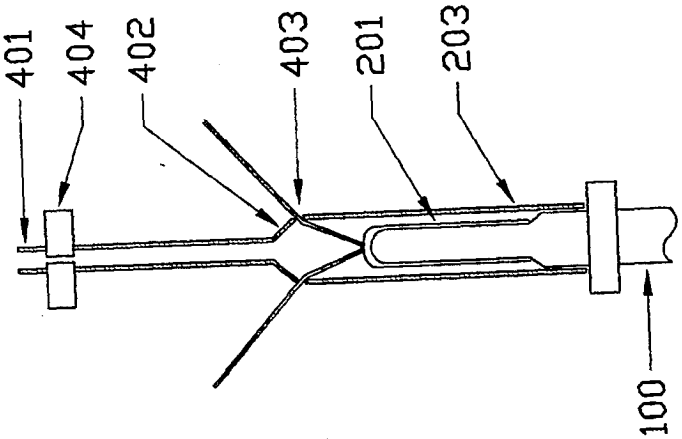

FIG 4

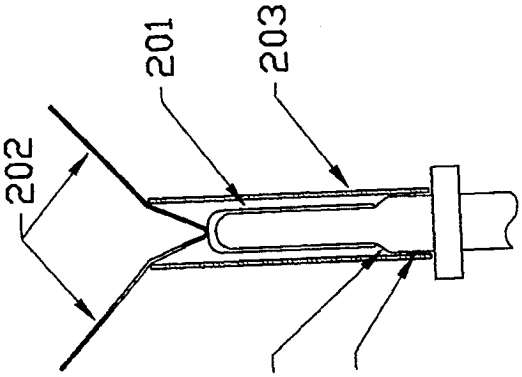

FIG 3

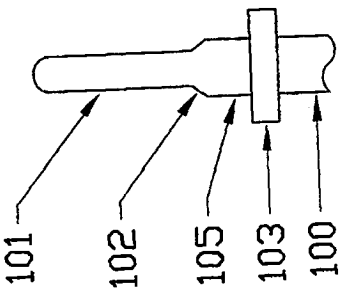

FIG 2

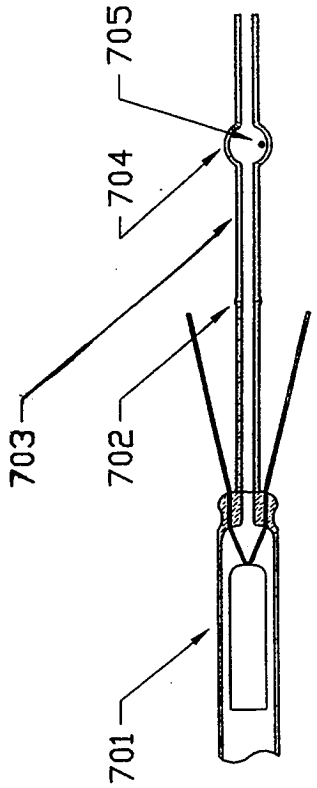

FIG 7

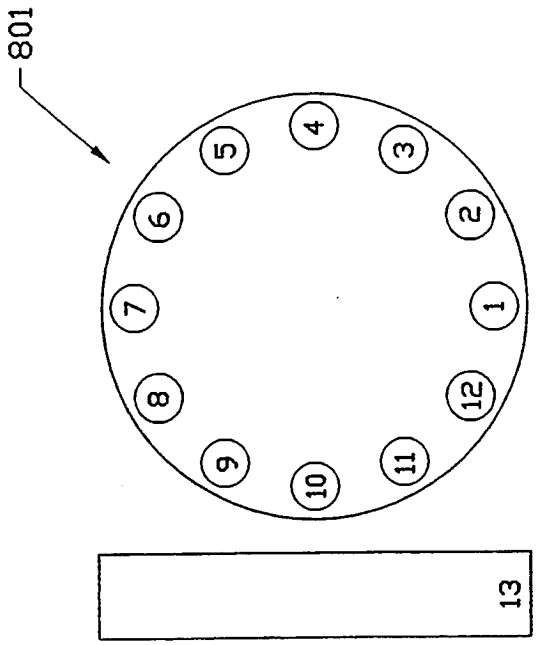

FIG 8

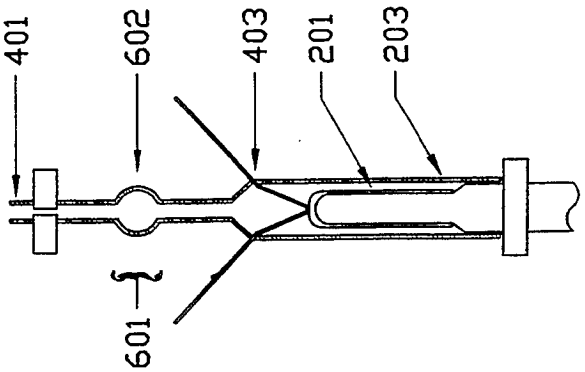

FIG 9

METHOD OF MANUFACTURING ELECTRODES

TECHNICAL FIELD

This invention relates to luminous tube signage, and more particularly, to an improved design and method for manufacturing electrodes utilized with luminous tube signage.

BACKGROUND OF THE INVENTION

Luminous tube signage has been used for decades. Typically, a tortuous length of glass tubing is formed into the desired design. Next, electrodes are sealed to either end, with one electrode being tubulated. The tube is then processed: baked, exhausted, backfilled and sealed. A transformer then applies voltage across the electrodes and causes the gas to give off light.

The manufacture of the electrodes is time consuming and labor intensive. FIG. **1** shows a prior art arrangement for manufacturing such electrodes. Typically, an electrode shell **10** includes two conductors **12** attached thereto. The conductors are inserted into die block holes **14**. A tungsten mandrel **15** is arranged beneath the tubulations and moves up into the tubulation as described below.

In operation, the entire arrangement of FIG. **1** is spun and heat is introduced in the area labeled **20** where the outer tube and inner tubulation overlap. Once outer tube **22** and inner tubulation **18** are red hot and plastic, the tungsten mandrel moves up inside the tubulation. Immediately thereafter, two press blocks (not shown for clarity) press area **20** inward, forming what is known in the industry as a pinch seal. The mandrel is then removed and the part annealed.

FIG. **1A** shows the finished electrode. FIG. **1B** is a side view of the finished electrode of FIG. **1A**.

The problem lies in the fact that the parts must be loaded by hand. The process of inserting two wires attached to an electrode shell into two holes cannot be automated.

The prior art process for manufacturing electrodes is somewhat automated, but the machines must be manually loaded. Manual loading limits production drastically, and increases "shrinkage"; i.e. broken parts due to operator errors.

For example, the design of a neon electrode necessitates manual loading by an operator. On an 8 head machine, an operator must perform a lengthy sequence of steps including (i) load a tubulation, (ii) insert an electrode shell with its two conductors engaged into two 0.030 diameter holes (iii) load an outer tube, and (iv) remove one finished part. This sequence is typically performed every 12 seconds, constantly, all day. The process produces approximately 300 electrodes per hour, less shrinkage of about 5% for a good operator.

Consider a glass part designed to be mass produced, such as a glass stem for a florescent lamp or a light bulb. These parts are produced without labor on a machine producing approximately 4000 per hour with about 2% shrinkage.

In view of the above, it can be appreciated that there exists a need for an improved design and manufacturing process for luminous tube electrodes which allows full automation and mass production.

SUMMARY OF THE INVENTION

The above and other problems of the prior art are overcome in accordance with the present invention which relates to a manufacturing technique for producing luminous tube electrodes. In accordance with the present invention, an outer tube is placed around a mandrel, and an electrode shell with its conductors attached is dropped onto the mandrel within the outer tube. The electrode shell is placed on the mandrel preferably upside down (relative to the prior art). The conductors need not be inserted into small holes. The outer tube circumferencially surrounds the outer perimeter of the electrode shell and the conductors emanate freely out of the top of the outer tube.

A tubulation is placed between the conductors and is preferably outwardly flared so that the flared end meets the end of the outer tube from which the conductors emanate. The conductors are thereby sandwiched between the flared end of the tubulation and the end of the outer tube from which they emanate. The tubulation and tube are then heated and fused together (i.e., a butt seal is formed), resulting in the electrode shell being contained within the outer tube and its conductors emanating to the outside at the point where the tubulation and outer tube meet.

Since the technique utilizes a "butt" type seal rather than a pinch seal, no mandrel is needed inside the tubulation to prevent it from closing. For purposes of explanation herein, a pinch seal is defined as the seal formed when the tubulation is placed partially inside the outer tube, and the outer tube is heated and pinched against the tubulation. A butt seal is the seal formed when the end of the tube is pressed against the end of the tubulation, and the junction of the two ends is heated.

BRIEF DESCRIPTION OF THE DRAWINGS

FIG. **1** shows a typical prior art arrangement for constructing neon tube electrodes;

FIG. **1A** shows a neon tube electrode resulting from the prior art arrangement of FIG. **1**;

FIG. **1B** is a side view of FIG. **1A**;

FIG. **2** shows a mandrel mounted on a rotatable shaft which may be utilized for practice of the present invention;

FIG. **3** depicts an outer tube with an electrode shell loaded on the mandrel of FIG. **2**;

FIG. **4** shows a tubulation and outer tube positioned together during a step of the inventive method;

FIG. **5** shows a completed electrode resulting from practice of the present invention;

FIG. **6** depicts an optional enhancement to the present invention wherein a bubble is blown in the tubulation;

FIG. **7** shows a prior art electrode and a tube with a bubble and mercury drop spliced to the tubulation;

FIG. **8** depicts a rotary index machine with an annealer to be used in an additional embodiment of the invention.

DETAILED DESCRIPTION OF THE PREFERRED EMBODIMENTS

FIG. **2** shows a mandrel **102** including an outer portion **105** and a shell holder **101**. Collar **103** functions to set the height of the outer tube. Shaft **100** rotates, and is connected to a suitable drive for this purpose.

FIG. **3** shows an outer tube **203** placed on the mandrel **102**. The mandrels are manufactured in various sizes so that they can be removed and replaced with mandrels of various sizes and/or shapes. In the particular embodiment of FIG. **3**, mandrel **102** is chosen such

that its outer portion **105** is just slightly less than the inner diameter of outer tube **203**. In this fashion, the outer portion **105** of mandrel **102** will hold the outer tube **203** in place and prevent it from wobbling from side to side. Typical values of standard outer tubing range from 8–15 millimeters (outer diameter), but this can vary.

An electrode shell **201** includes two conductors **202** attached thereto. As shown in FIG. **3**, the electrode shell is dropped over the portion of the mandrel **101** and the conductors **202** emanate from the end of outer tube **203**.

FIG. **4** shows the arrangement of FIG. **3** with the further addition that the tubulation **401** including flared end **402**, is shown butted up against the end **403** of outer tube **203**. A typical value of the diameter of tubulation **401** is 5 millimeters, but this can vary depending upon the application.

Tubulation **401** is held in place by a suitable clamp **404** or other method. The particular technique used is not critical to the present invention.

In operation, as shaft **100** rotates, heat is introduced at location **403**. Clamp **404** is connected to shaft **100** so that all the components: tube **203**, shell **201** with conductors **202**, and tubulation **401**, all rotate in unison. The complete assembly is termed a "head".

As the tubulation and tube spin, they are butt sealed to each other. When the flared end **402** and the end of tube **203** are red hot, they are pushed together and worked slightly together and apart while in the fire to ensure a good seal. The clamp **404** or the mandrel may move up and down to perform this step.

As is well known in the art, the portion of the conductors that seals to the glass is special wire with a matching coefficient of expansion to the glass. For example, Dumet wire works well with lead glass. The matching coefficients prevents the finished seal from being too stressed and breaking. Unlike prior art arrangements, a pinch seal is not utilized.

As shown in FIG. **5**, the finished electrode can then be removed with the electrode shell therewithin, resulting in a usable electrode **501**.

As an optional enhancement to the present invention, a technique is provided for blowing a bubble along the inner tubulation **401**. This is desired for the reasons set forth below.

The majority of neon tubes are actually filled with argon and mercury. To insert the mercury into the tube, it is known in the art to splice a glass tube, usually 5–6 mm in diameter, to the electrode's tubulation and blow a small bubble approximately 15 mm in diameter in the glass tube. FIG. **7** shows such a tube of glass **703**, with a bubble **704**, spliced at point **702** to electrode **701**. Once cooled, a small amount of mercury **705** is injected into the bubble **704**. As is well known in the art, the arrangement is next connected to a manifold and processed. It would therefore be of great value and convenience if the electrodes came with the bubble already in the tubulation. The machine used to produce prior art electrodes cannot blow a bubble in the tubulation because the tubulation is encased by the die block during manufacture.

As shown in FIG. **6**, the present invention includes a technique for providing the bubble. After the flame is utilized at junction **403** of tubulation **401** and outer tube **203**, a different flame may be utilized to soften a portion **601** of tubulation **401**. A bubble is then blown in tubulation **401** by injecting a small burst of air is into the top thereof. Since the heated portion is softer than the remainder of the tubulation **401**, bubble **602** is formed. The resulting electrode arrangement is identical to that of FIG. **5** with the exception that the small bubble **602** would be contained in tubulation **401**.

The operations described hereinbefore may be performed conveniently and quickly on a rotary head index machine. More specifically, several rotating assemblies are mounted on a dial plate that indexes in a circle as shown in FIG. **8**. The entire rotary index **801** moves from one position to the next and the operations performed at each position are different. Each position has stationary tooling, e.g. torches or mechanisms for inserting or removing a part, etc., in a similar manner to an assembly line. For example, the following table shows how the arrangement could be set up:

Position	Operation
1.	Tube loaded
2.	Shell loaded
3.	Tubulation loaded
4.	Preheat area 403
5.	Heat area 403
6.	Heat and work the glass
7.	Cool area 403 and preheat tubulation area 601
8.	Heat tubulation area 601
9.	Heat & Blow bubble 602
10.	Cool
11.	Cool
12.	Remove the finished part.
13.	Anneal the finished part

Of course, other arrangements may be set up. The important advantage is that the entire process can be automated. While the above describes a preferred embodiment of the present invention is understood that various other modifications and/or additions may be made by those of ordinary skill in the art without violating the spirit or scope of the present invention. For example, any shape of flared end may be used. Indeed, the flare may even be eliminated and the tubulation made the same diameter as the outer tube. The tubulation and tube may be pulled away from one another after the seal is formed, in order to form a constriction. The electrode may be turned upside down from the way it is shown in the figures herein, however, it would then need to be mounted on the shell holder **101** so that it does not fall off. A vacuum on the shell holder or a pair of clips would suffice for this purpose. The rotating assemblies need not rotate. The fires at each position can be moved back and forth instead. Other modifications and/or additions will be apparent to those of ordinary skill in the art.

I claim:

1. A method of manufacturing an electrode comprising the steps of:

placing an electrode shell within an outer tube and on an electrode shell holder such that conductors connected to said electrode shell emanate freely from an end of said outer tube

placing a tubulation against an end of said outer tube thereby sandwiching said conductors between said outer tube and said tubulation; and

fusing said tubulation to said outer tube.

2. The method of claim **1** wherein said step of fusing comprises a step of rotating said outer tube and said tubulation while heat is applied at a junction thereof.

3. The method of claim 1 wherein said tubulation includes a flare at an end thereof.

4. The method of claim 3 further comprising the step of working said outer tube with respect to said tubulation.

5. The method of claim 4 wherein a plurality of said steps are performed while said outer tube is mounted on a rotary index.

6. The method of claim 3 further comprising the step of forming a bubble in a portion of said tubulation.

7. Apparatus for forming luminous tube electrodes comprising:

a mandrel for holding an electrode shell thereon;

means for supporting an outer tube to circumferentially surround the electrode shell while allowing the conductors to freely emanate from an end thereof;

means for butting a tubulation against an end of said outer tube;

means for fusing said tubulation to said outer tube.

8. Apparatus of claim 7 further comprising:

a shaft connected to said mandrel;

means for rotating said shaft, thereby rotating said mandrel.

9. Apparatus of claim 8 further comprising:

means for heating a portion of said tubulation; and

means for blowing a bubble in said tubulation.

10. Apparatus of claim 9 further comprising means for working said inner and outer tubulations.

11. A method of forming a luminous tube electrode comprising the steps of:

placing an electrode shell within an outer tube and on an electrode shell holder, said outer tube having an end;

placing an end of a tubulation against said end of said outer tube to form a junction; and

fusing said tubulation to said outer tube at said junction.

12. The method of claim 11 wherein said electrode includes at least two conductors attached thereto.

13. The method of claim 11 wherein said tubulation includes a flare proximate to the end thereof.

* * * * *

G. H. LOMAX.

MOLD FOR GLASSWARE.

No. 9,904. Reissued Oct. 18, 1881.

Fig. 1.

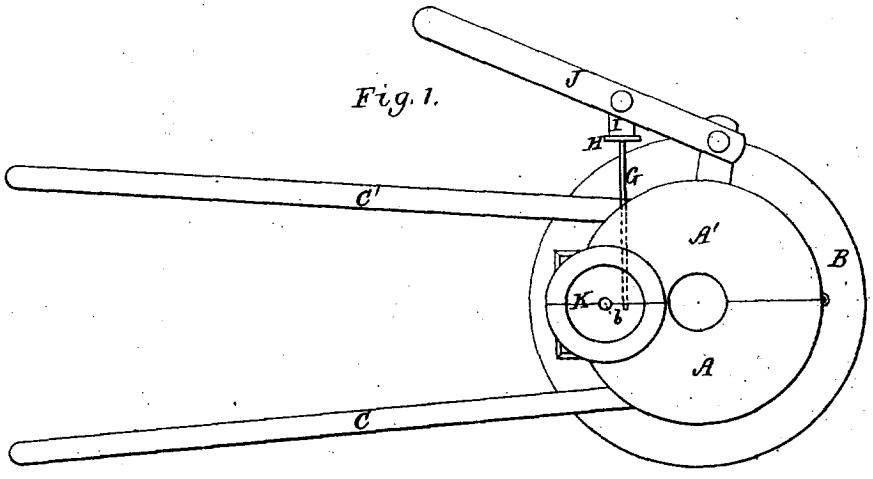

Fig. 2.

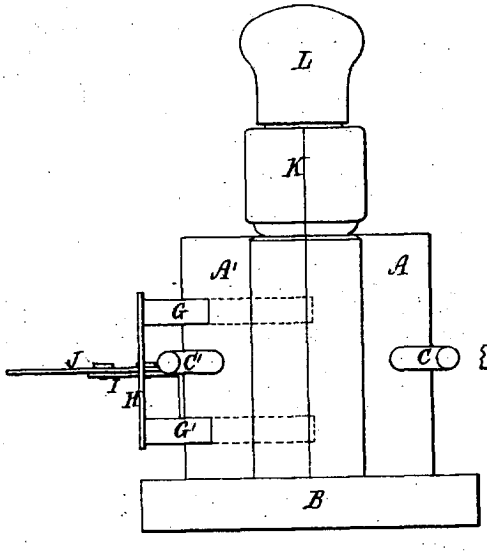

Fig. 3.

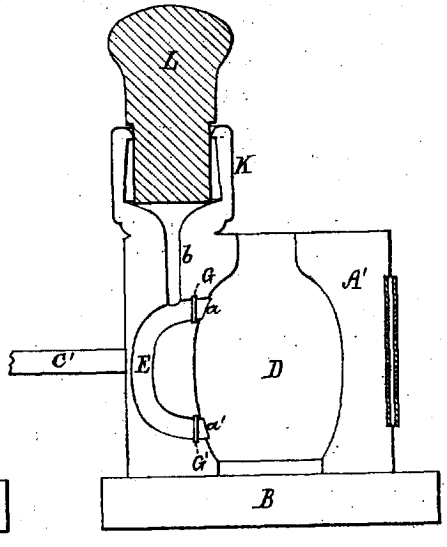

Witnesses.

S. N. Piper.

John H. Litchfield.

Inventor.

George H. Lomax.

by R. H. Ray atty.

UNITED STATES PATENT OFFICE.

GEORGE H. LOMAX, OF SOMERVILLE, MASSACHUSETTS.

MOLD FOR GLASSWARE.

SPECIFICATION forming part of Reissued Letters Patent No. 9,904, dated October 18, 1881.

Original No. 143,629, dated October 14, 1873. Application for reissue filed August 5, 1881.

To all whom it may concern:

Be it known that I, GEORGE H. LOMAX, of Somerville, of the county of Middlesex and State of Massachusetts, have invented a new and useful Improvement in Glassware-Molds, &c.; and I do hereby declare the same to be described in the following specification, reference being had to the accompanying drawings, of which—

Figure 1 is a top view of all of a mold or apparatus of my invention except the press-plunger, to be described. Fig. 2 is a front elevation, and Fig. 3 a vertical section, of such apparatus with its press-plunger.

The object of my invention is to mold a handle and apply it to what is termed by glassware-makers a "blow-over" article; also, to blow the said article in a mold and form and apply or affix a handle to the said article while it is in the mold; and my invention consists, in part, in the combination of a handle-matrix and a press, essentially as hereinafter described, with a mold or device for holding against the said matrix the glass article, so that molten glass may be forced into the matrix and against the glass article and become connected thereto and constitute a handle therefor.

In using my apparatus the article of glassware may be molded or formed in the mold, and subsequently have the handle applied to it.

In the drawings, A A′ denote the two halves or main parts of the mold, they being hinged together and mounted upon a base, E, in the ordinary manner.

C C′ are handles extending from such parts A A′, and for aiding in opening and closing them.

D represents one half of the matrix for forming the body of the article, the other half corresponding with such part D, with the exception of the gates thereof.

Within the shell of the mold is the handle-forming matrix E, one half of such matrix being formed in each half of the mold, and opening into the main matrix by two mouths, *a a′*, provided, respectively, with gates G G′, by which communication between the handle-matrix and the body-matrix may be cut off as occasion may require. These gates extend transversely through one half of the mold, and are connected to an upright bar, H, which, by means of an arm, I, is pivoted to a lever, J, by which the gates may be moved either to open or close communication between the matrices, as may be desirable.

K is an auxiliary font or glass-receiving chamber, mounted upon the top of the mold, such font communicating by a channel, *b*, with the handle-forming matrix, as shown in Fig. 3. The chamber K is provided with a plunger or presser, L, by which the molten glass, after having been poured into the chamber, can be pressed through the passage *b* into the handle-forming matrix, in order to fill such and form a handle and cause the ends of such handle to so impinge against the heated glass article in the body-matrix as to be firmly affixed to it, (the said article.) This employment of the presser or plunger insures not only the formation of the handle, but a strong and positive fixation of it to the body portion of the article of glassware.

Having described the mechanism for forming a glass article and its handle and fixing them to each other, the method or process of using such is as follows: The gates G G′ are first to be closed, in order to interrupt communication between the body-matrix and the handle-matrix. The glass-blower having collected on the end of his rod or blow-pipe a sufficient quantity of molten glass to form the body of the article, and having manipulated and treated it in the ordinary manner, places it in the body-matrix and closes together the several parts of the mold. This having been effected, he next inflates the glass, so as to cause it to fill the body-matrix and form therein the body portion of the article. Having done this, he opens the gates and pours into the font or press-chamber a sufficient quantity of glass in a molten state to form the handle of the article, and he puts the plunger into the press-chamber and forces the glass thereof into the handle-forming matrix, the end portions of the handle being by such firmly pressed into contact with the outer surface of the article in the body-matrix, a strong union of the handle and body being thus produced.

Having thus described my invention, what I claim as such is as follows, viz:

1. The combination of the handle-forming matrix, and its press, with a device for holding or supporting against the said matrix a vessel or article of glassware, while a handle is be-

ing formed, in the said matrix and against the said vessel or article, by means of the matrix and the press, substantially as set forth.

2. The combination of the handle-matrix, and its gates and press, with a device for holding or supporting against the matrix a vessel or article of glassware while a handle is being formed, in the matrix and against the said vessel or article, by means of the matrix and the press, substantially as set forth.

3. The process of molding a handle of glass, and fixing it to an article of glassware, such consisting in confining the article in a holder or mold, and against a handle-forming matrix, and by means of a press, as described, forcing glass, in a molten state, into the said matrix, and against the glass article held thereto, all being substantially as set forth.

4. Blowing a vessel or article of glassware in and forming it by a mold and by means of a handle-matrix, and a press, as set forth, and while the said article is in a sufficiently-heated state, molding a handle from molten glass, within said matrix, and forcing such handle therein, against the blown and heated article in the mold, so as to cause the handle and article of glass to combine with or to be connected to each other, as described.

5. The combination of the handle-forming matrix, and its press, with a mold for molding, in manner as described, the body of an article of glassware, and holding it against the handle-forming matrix, in order that a handle, while being made in such matrix, may be forced into contact with and united to the said body, all being substantially as set forth.

GEORGE H. LOMAX.

Witnesses:
R. H. EDDY,
E. B. PRATT.

US00RE36055E

United States Patent [19]

Preston

[11] E **Patent Number: Re. 36,055**

[45] **Reissued Date of Patent: Jan. 19, 1999**

[54] **METHOD OF MANUFACTURING ELECTRODES**

[76] Inventor: **Daniel Preston**, 537 Greenwich St. 6th Flr. South, New York, N.Y. 10014

[21] Appl. No.: **641,095**

[22] Filed: **Apr. 29, 1996**

Related U.S. Patent Documents

Reissue of:

[64] Patent No.: **5,378,183**
Issued: **Jan. 3, 1995**
Appl. No.: **46,411**
Filed: **Apr. 12, 1993**

[51] **Int. Cl.**[6] **H01J 9/26**

[52] **U.S. Cl.** **445/26**; 445/67; 65/138; 65/155; 65/42

[58] **Field of Search** 445/9, 17, 26, 445/67; 65/42, 138, 155

[56] **References Cited**

U.S. PATENT DOCUMENTS

1,121,802	12/1914	Clark	445/9
1,637,989	8/1927	Eisler	65/155 X
2,447,158	8/1948	Cartum	65/57
2,549,359	4/1951	Bakanan	445/67
2,565,125	8/1951	Flaws	445/67 X
2,672,711	3/1954	Nash	65/155
3,395,007	7/1968	Schor	65/42
3,685,881	8/1972	Rochet	445/27

Primary Examiner—Kenneth J. Ramsey

[57] **ABSTRACT**

An improved design and method and of manufacturing a luminous tube electrode comprises the steps of placing an electrode shell in an outer tube and allowing conductors connected to the electrode shell to emanate from an open end of the outer tube. A tubulation with a flared end is then butted up against the end of the outer tube, thereby sandwiching the conductors between the flared end of the tubulation and the outer tube. The flared end of the tubulation are then fused to one another forming a hermetic seal between each other and the conductors, resulting in the finished electrode. A further provision is made to blow a bubble in the tubulation.

14 Claims, 3 Drawing Sheets

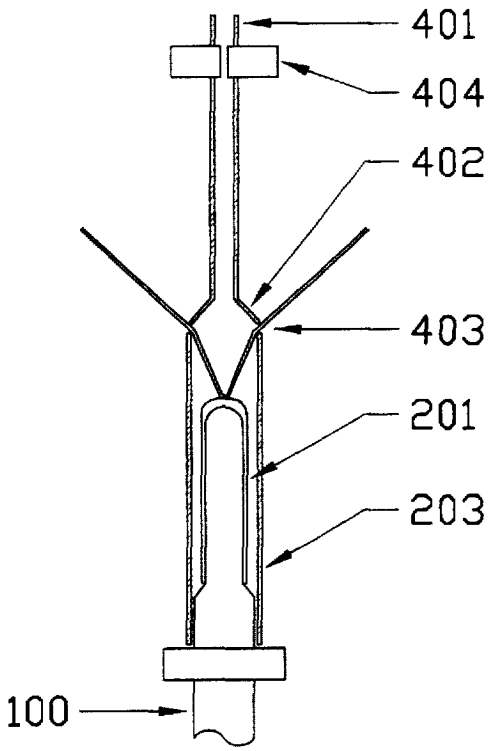

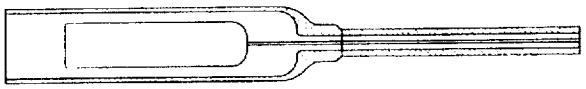

FIG 1B

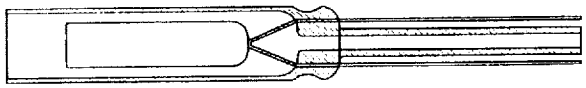

FIG 1A

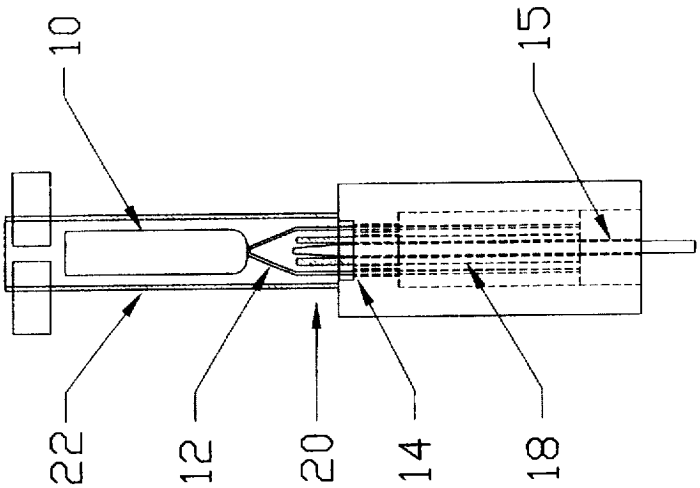

FIG 1

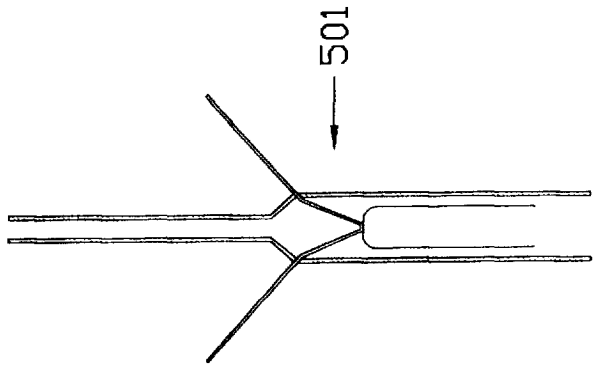

FIG 5

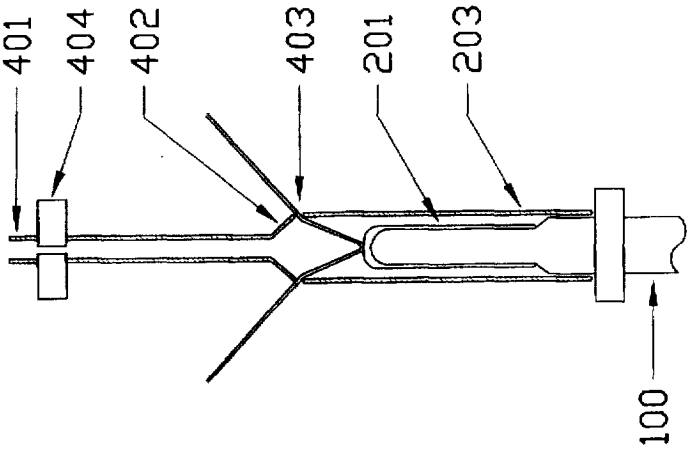

FIG 4

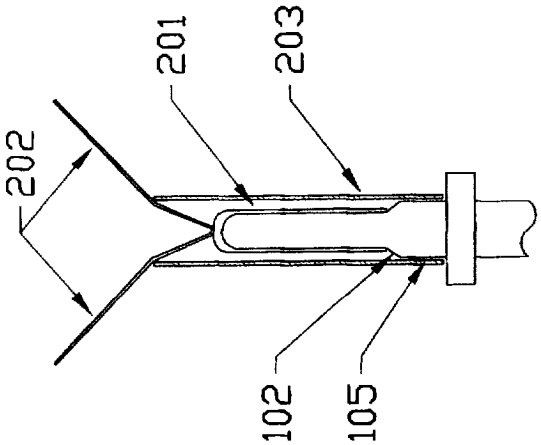

FIG 3

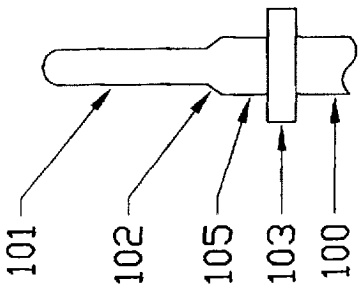

FIG 2

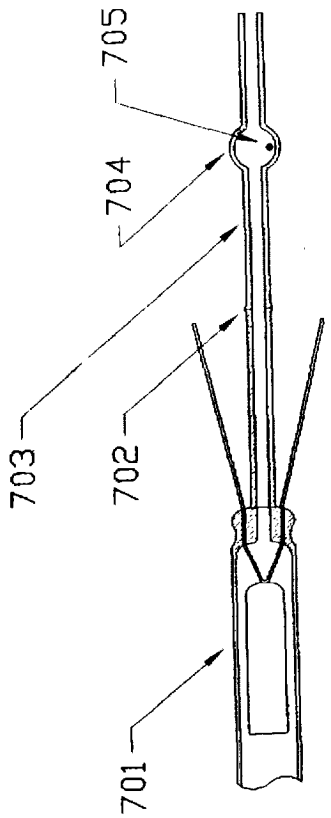

FIG 7

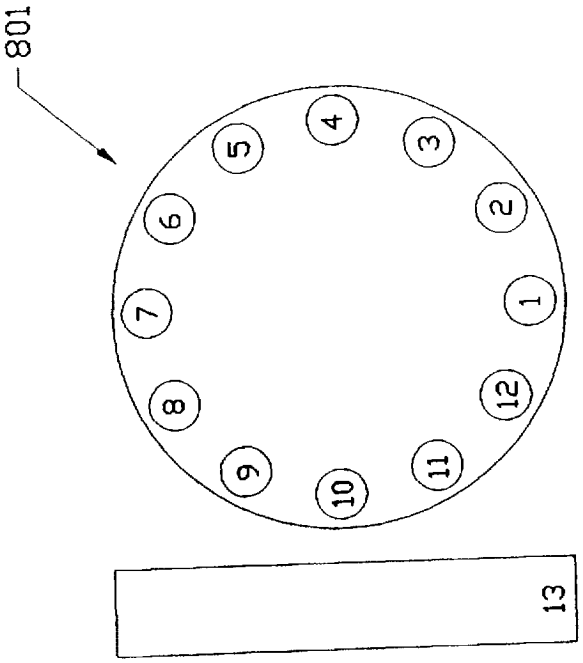

FIG 8

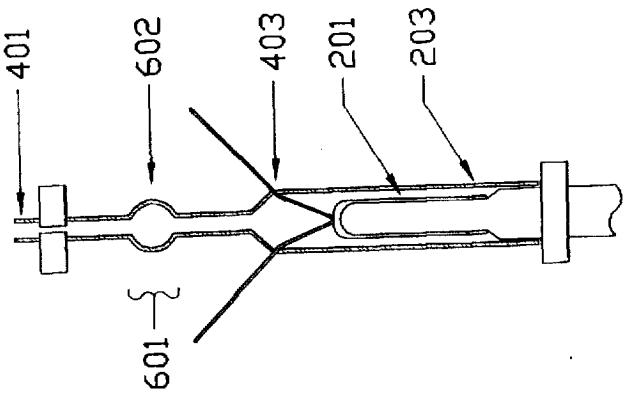

FIG 9

METHOD OF MANUFACTURING ELECTRODES

Matter enclosed in heavy brackets [ ] appears in the original patent but forms no part of this reissue specification; matter printed in italics indicates the additions made by reissue.

TECHNICAL FIELD

This invention relates to luminous tube signage, and more particularly, to an improved design and method for manufacturing electrodes utilized with luminous tube signage.

BACKGROUND OF THE INVENTION

Luminous tube signage has been used for decades. Typically, a tortuous length of glass tubing is formed into the desired design. Next, electrodes are sealed to either end, with one electrode being tubulated. The tube is then processed: baked, exhausted, backfilled and sealed. A transformer then applies voltage across the electrodes and causes the gas to give off light

The manufacture of the electrodes is time consuming and labor intensive. FIG. 1 shows a prior art arrangement for manufacturing such electrodes. Typically, an electrode shell **10** includes two conductors **12** attached thereto. The conductors are inserted into die block holes **14**. A tungsten mandrel **15** is arranged beneath the tubulations and moves up into the tubulation as described below.

In operation, the entire arrangement of FIG. 1 is spun and heat is introduced in the area labeled **20** where the outer tube and inner tubulation overlap. Once outer tube **22** and inner tubulation **18** are red hot and plastic, the tungsten mandrel moves up inside the tubulation. Immediately thereafter, two press blocks (not shown for clarity) press area **20** inward, forming what is known in the industry as a pinch seal. The mandrel is then removed and the part annealed.

FIG. 1A shows the finished electrode. FIG. 1B is a side view of the finished electrode of FIG. 1A.

The problem lies in the fact that the parts must be loaded by hand. The process of inserting two wires attached to an electrode shell into two holes cannot be automated.

The prior art process for manufacturing electrodes is somewhat automated, but the machines must be manually loaded. Manual loading limits production drastically, and increases "shrinkge"; i.e. broken parts due to operator errors.

For example, the design of a neon electrode necessitates manual loading by an operator. On an 8 head machine, an operator must perform a lengthy sequence of steps including (i) load a tubulation, (ii) insert an electrode shell with its two conductors engaged into two 0.030 diameter holes (iii) load an outer tube, and (iv) remove one finished part. This sequence is typically performed every 12 seconds, constantly, all day. The process produces approximately 300 electrodes per hour, less shrinkage of about 5% for a good operator.

Consider a glass part designed to be mass produced, such as a glass stem for a florescent lamp or a light bulb. These parts are produced without labor on a machine producing approximately 4000 per hour with about 2% shrinkage.

In view of the above, it can be appreciated that there exists a need for an improved design and manufacturing process for luminous tube electrodes which allows full automation and mass production.

SUMMARY OF THE INVENTION

The above and other problems of the prior art are overcome in accordance with the present invention which relates

to a manufacturing technique for producing luminous tube electrodes. In accordance with the present invention, an outer tube is placed around a mandrel, and an electrode shell with its conductors attached is dropped onto the mandrel within the outer tube. The electrode shell is placed on the mandrel preferably upside down (relative to the prior art). The conductors need not be inserted into small holes. The outer tube circumferencially surrounds the outer perimeter of the electrode shell and the conductors emanate freely out of the top of the outer tube.

A tubulation is placed between the conductors and is preferably outwardly flared so that the flared end meets the end of the outer tube from which the conductors emanate. The conductors are thereby sandwiched between the flared end of the tubulation and the end of the outer tube from which they emanate. The tubulation and tube are then heated and fused together (i.e., a butt seal is formed), resulting in the electrode shell being contained within the outer tube and its conductors emanating to the outside at the point where the tubulation and outer tube meet.

Since the technique utilizes a "butt" type seal rather than a pinch seal, no mandrel is needed inside the tubulation to prevent it from closing. For purposes of explanation herein, a pinch seal is defined as the seal formed when the tubulation is placed partially inside the outer tube, and the outer tube is heated and pinched against the tubulation. A butt seal is the seal formed when the end of the tube is pressed against the end of the tubulation, and the junction of the two ends is heated.

BRIEF DESCRIPTION OF THE DRAWINGS

FIG. 1 shows a typical prior art arrangement for constructing neon tube electrodes;

FIG. 1A shows a neon tube electrode resulting from the prior art arrangement of FIG. 1;

FIG. 1B is a side view of FIG. 1A;

FIG. 2 shows a mandrel mounted on a rotatable shaft which may be utilized for practice of the present invention;

FIG. 3 depicts an outer tube with an electrode shell loaded on the mandrel of FIG. 2;

FIG. 4 shows a tubulation and outer tube positioned together during a step of the inventive method;

FIG. 5 shows a completed electrode resulting from practice of the present invention;

FIG. 6 depicts an optional enhancement to the present invention wherein a bubble is blown in the tubulation;

FIG. 7 shows a prior art electrode and a tube with a bubble and mercury drop spliced to the tubulation;

FIG. 8 depicts a rotary index machine with an annealer to be used in an additional embodiment of the invention.

DETAILED DESCRIPTION OF THE PREFERRED EMBODIMENTS

FIG. 2 shows a mandrel **102** including an outer portion **105** and a shell holder **101**. Collar **103** functions to set the height of the outer tube. Shaft **100** rotates, and is connected to a suitable drive for this purpose.

FIG. 3 shows an outer tube **203** placed on the mandrel **102**. The mandrels are manufactured in various sizes so that they can be removed and replaced with mandrels of various sizes and/or shapes. In the particular embodiment of FIG. 3, mandrel **102** is chosen such that its outer portion **105** is just slightly less than the inner diameter of outer tube **203**. In this fashion, the outer portion **105** of mandrel **102** will hold the

outer tube **203** in place and prevent it from wobbling from side to side. Typical values of standard outer tubing range from 8–15 millimeters (outer diameter), but this can vary.

An electrode shell **201** includes two conductors **202** attached thereto. As shown in FIG. **3**, the electrode shell is dropped over the portion of the mandrel **101** and the conductors **202** emanate from the end of outer tube **203**.

FIG. **4** shows the arrangement of FIG. **3** with the further addition that the tubulation **401** including flared end **402**, is shown butted up against the end **403** of outer tube **203**. A typical value of the diameter of tubulation **401** is 5 millimeters, but this can vary depending upon the application.

Tubulation **401** is held in place by a suitable clamp **404** or other method. The particular technique used is not critical to the present invention.

In operation, as shaft **100** rotates, heat is introduced at location **403**. Clamp **404** is connected to shaft **100** so that all the components: tube **203**, shell **201** with conductors **202**, and tubulation **401**, all rotate in unison. The complete assembly is termed a "head".

As the tubulation and tube spin, they are butt sealed to each other. When the flared end **402** and the end of tube **203** are red hot, they are pushed together and worked slightly together and apart while in the fire to ensure a good seal. The clamp **404** or the mandrel may move up and down to perform this step.

As is well known in the art, the portion of the conductors that seals to the glass is special wire with a matching coefficient of expansion to the glass. For example, Dumet wire works well with lead glass. The matching coefficients prevents the finished seal from being too stressed and breaking. Unlike prior art arrangements, a pinch seal is not utilized.

As shown in FIG. **5**, the finished electrode can then be removed with the electrode shell therewithin, resulting in a usable electrode **501**.

As an optional enhancement to the present invention, a technique is provided for blowing a bubble along the inner tubulation **401**. This is desired for the reasons set forth below.

The majority of neon tubes are actually filled with argon and mercury. To insert the mercury into the tube, it is known in the art to splice a glass tube, usually 5–6 mm in diameter, to the electrode's tubulation and blow a small bubble approximately 15 mm in diameter in the glass tube. FIG. **7** shows such a tube of glass **703**, with a bubble **704**, spliced at point **702** to electrode **701**. Once cooled, a small amount of mercury **705** is injected into the bubble **704**. As is well known in the art, the arrangement is next connected to a manifold and processed. It would therefore be of great value and convenience if the electrodes came with the bubble already in the tubulation. The machine used to produce prior art electrodes cannot blow a bubble in the tubulation because the tubulation is encased by the die block during manufacture.

As shown in FIG. **6**, the present invention includes a technique for providing the bubble. After the flame is utilized at junction **403** of tubulation **401** and outer tube **203**, a different flame may be utilized to soften a portion **601** of tubulation **401**. A bubble is then blown in tubulation **401** by injecting a small burst of air is into the top thereof. Since the heated portion is softer than the remainder of the tubulation **401**, bubble **602** is formed. The resulting electrode arrangement is identical to that of FIG. **5** with the exception that the small bubble **602** would be contained in tubulation **401**.

The operations described hereinbefore may be performed conveniently and quickly on a rotary head index machine. More specifically, several rotating assemblies are mounted on a dial plate that indexes in a circle as shown in FIG. **8**. The entire rotary index **801** moves from one position to the next and the operations performed at each position are different. Each position has stationary tooling, e.g. torches or mechanisms for inserting or removing a part, etc., in a similar manner to an assembly line. For example, the following table shows how the arrangement could be set up:

Position	Operation
1.	Tube loaded
2.	Shell loaded
3.	Tubulation loaded
4.	Preheat area 403
5.	Heat area 403
6.	Heat and work the glass
7.	Cool area 403 and preheat tubulation area 601
8.	Heat tubulation area 601
9.	Heat & Blow bubble 602
10.	Cool
11.	Cool
12.	Remove the finished part.
13.	Anneal the finished part

Of course, other arrangements may be set up. The important advantage is that the entire process can be automated. While the above describes a preferred embodiment of the present invention is understood that various other modifications and/or additions may be made by those of ordinary skill in the art without violating the spirit or scope of the present invention. For example, any shape of flared end may be used. Indeed, the flare may even be eliminated and the tubulation made the same diameter as the outer tube. The tubulation and tube may be pulled away from one another after the seal is formed, in order to form a constriction. The electrode may be turned upside down from the way it is shown in the figures herein, however, it would then need to be mounted on the shell holder **101** so that it does not fall off. A vacuum on the shell holder or a pair of clips would suffice for this purpose. The rotating assemblies need not rotate. The fires at each position can be moved back and forth instead. Other modifications and/or additions will be apparent to those of ordinary skill in the art

I claim:

1. A method of manufacturing an electrode comprising the steps of:

placing an electrode shell within an outer tube and on an electrode shell holder such that conductors connected to said electrode shell emanate freely from an end of said outer tube

placing a tubulation against an end of said outer tube thereby sandwiching said conductors between said outer tube and said tubulation; and

fusing said tubulation to said outer tube.

2. The method of claim **1** wherein said step of fusing comprises a step of rotating said outer tube and said tubulation while heat is applied at a junction thereof.

3. The method of claim **1** wherein said tubulation includes a flare at an end thereof.

4. The method of claim **3** further comprising the step of working said outer tube with respect to said tubulation.

5. The method of claim **4** wherein a plurality of said steps are performed while said outer tube is mounted on a rotary index.

6. The method of claim **3** further comprising the step of forming a bubble in a portion of said tubulation.

7. Apparatus for forming luminous tube electrodes comprising

a mandrel for holding an electrode shell thereon;

means for supporting an outer tube to circumferentially surround the electrode shell while allowing the conductors to freely emanate from an end thereof;

means for butting a tubulation against an end of said outer tube;

means for fusing said tubulation to said outer tube.

8. Apparatus of claim 7 further comprising:

a shaft connected to said mandrel;

means for rotating said shaft, thereby rotating said mandrel.

9. Apparatus of claim 1 further comprising:

means for heating a portion of said tubulation; and

means for blowing a bubble in said tubulation.

10. Apparatus of claim 9 further comprising means for working said inner and outer tubulations.

11. A method of forming a luminous tube electrode comprising the steps of:

placing an electrode shell within an outer tube and on an electrode shell bolder, said outer tube having an end;

placing an end of a tubulation against said end of said outer tube to form a junction; and

fusing said tubulation to said outer tube at said junction.

12. The method of claim 11 wherein said electrode includes at least two conductors attached thereto.

13. The method of claim 11 wherein said tubulation includes a flare proximate to the end thereof.

14. A method of producing an electrode comprising the steps of:

a) placing an outer tube proximate to a tubulation;

b) positioning an electrode shell within said outer tube;

c) merging said tubulation to said outer tube;

d) heating a predetermined length of said tubulation; and

e) injecting gas through said tubulation and outer tube to thereby cause a bubble to be formed in said tubulation.

* * * * *